DS DIESSE FLUID CONTROL

GLASS LEVEL GAUGE
REFLEX TYPE
PN100 and PN160 / Class 600 and 900

DS LG - RPF SHV

Code: DS LG-RPF…-… /100/RF-SHV/…/…-M…-CS/CS

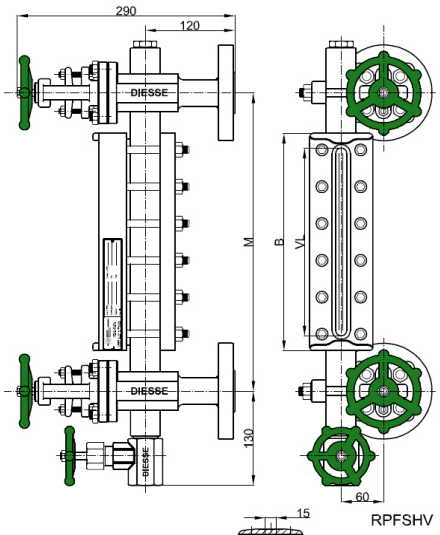

RPFSHV

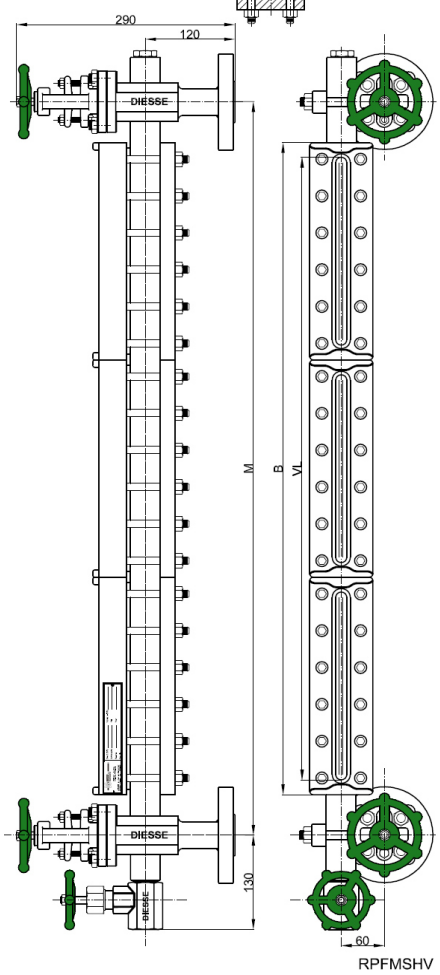

RPFMSHV

Technical data

Service conditions
Max Pressure: PN100; Class 600 (A105: 102 bar @ 38°C; AISI 316L: 99,3 bar @ 38°C) and
PN160; Class 900 (A105: 153,1 bar @ 38°C; AISI 316L: 148,9 bar @ 38°C)
Max Temperature: 300°C (According to DIN 7081 for glasses, see page 1.69)

View
Standard: front, on request lateral (right or left) adjustable in the production phase

Distance (Centre-to-centre)
Standard: see below table for minimum distance (Fixed distance, not adjustable)
Option: On request intermediate distances and over 2.000 mm

Materials (Standard)

Execution:	CS/CS	SS/CS	SS/SS
Gauge body:	ASTM A105 / A105 LF2	AISI 316L	AISI 316L
Valves body:	A105 LF2	AISI 316L	AISI 316L
Stem, disc / seat valves:	AISI 410 / AISI 316	AISI 316	AISI 316
Non-wetted parts:	Carbon steel galvanized	Carbon steel galvanized	AISI 316

Gaskets
Standard: graphite/copper Option: graphite/AISI 316 or PTFE/AISI316

Shut-off valves
DS SHV: globe type
Handling: by handwheel
Process connections:
Standard flanges: UNI PN100-160 DN20-25 ANSI #600-900/RF DN ¾“ - 1“
Standard threaded unions: BSP-M ¾” - 1” NPT-M ¾” - 1”
Options: further connections types or direct connections to the process without shut-off valves (See page 1.53)
Vent: Standard: threaded ½” with plug Option: see page 1.54
Drain: Standard: valve DS DHV threaded ¾” Option: see page 1.54

Glasses
Reflex - Borosilicate glass, “extra hard” and thermally pre-stressed - According to DIN 7081
Standard: fitted with type B (See page 1.69)

Accessories
See from page 1.55

Weights
Housing DS RPF: see below table
Valves DS SHV: Kg. 13,5 approx. (With flanges UNI DN20 PN100)

Tightening torque of housing screws
Standard: 75 Nm

Spare parts
Housing DS RPF: see from page 1.69 (Drawing with components and parts list see page 1.63)
Valves DS SHV: see from page 1.74 (Drawing with components and parts list see page 1.68)

CODE	TYPE	BODY Length [mm]	DISTANCE MINIMUM SL [mm]	VISIBLE Length [mm]	GLASS Length [mm]	WEIGHT Housing [Kg]
	x No. el.	B	M = B+80	VL	x No. elements	
11	1x1	130	**210**	**95**	115x1	7,7
12	2x1	155	**235**	**120**	140x1	8,6
13	3x1	180	**260**	**145**	165x1	9,9
14	4x1	205	**285**	**170**	190x1	11,0
15	5x1	235	**315**	**200**	220x1	12,3
16	6x1	265	**345**	**230**	250x1	13,1
17	7x1	295	**375**	**260**	280x1	14,8
18	8x1	335	**415**	**300**	320x1	16,0
19	9x1	360	**440**	**320**	340x1	17,7
24	4x2	410	**490**	**375**	190x2	20,5
25	5x2	470	**550**	**435**	220x2	23,1
26	6x2	530	**610**	**495**	250x2	24,7
27	7x2	590	**670**	**555**	280x2	28,1
28	8x2	670	**750**	**635**	320x2	30,5
29	9x2	720	**800**	**680**	340x2	33,9
36	6x3	795	**875**	**760**	250x3	36,3
37	7x3	885	**965**	**850**	280x3	41,4
38	8x3	1005	**1085**	**970**	320x3	45,0
39	9x3	1080	**1160**	**1040**	340x3	50,1
47	7x4	1180	**1260**	**1145**	280x4	54,7
48	8x4	1340	**1420**	**1305**	320x4	59,5
49	9x4	1440	**1520**	**1400**	340x4	66,3
57	7x5	1475	**1555**	**1440**	280x5	68,0
58	8x5	1675	**1755**	**1640**	320x5	74,0
59	9x5	1800	**1880**	**1760**	340x5	82,5

Tab. RPF